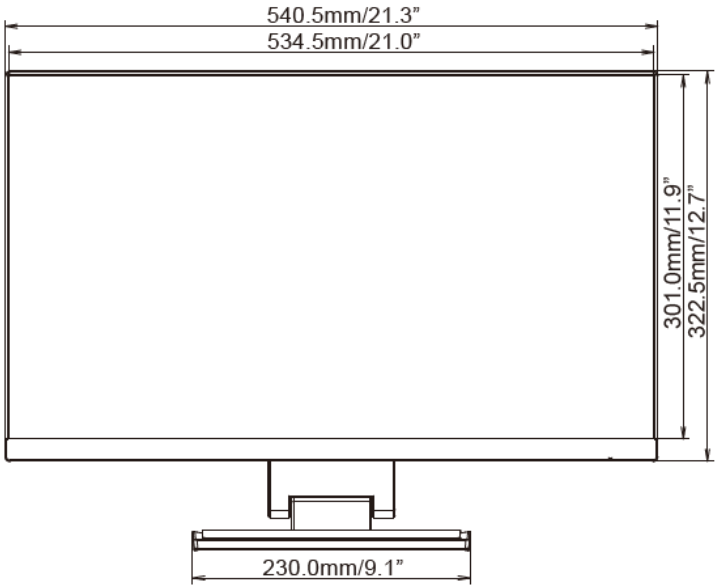
540.5mm/21.3”
534.5mm/21.0”
301.0mm/11.9”
322.5mm/12.7”
230.0mm/9.1”

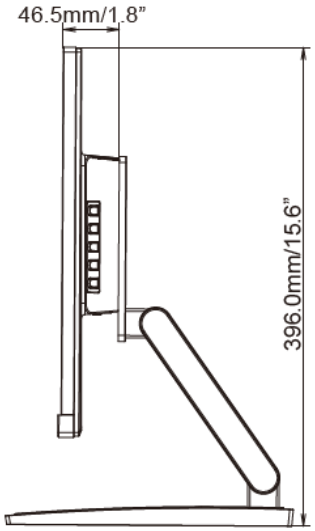
46.5mm/1.8”
396.0mm/15.6”

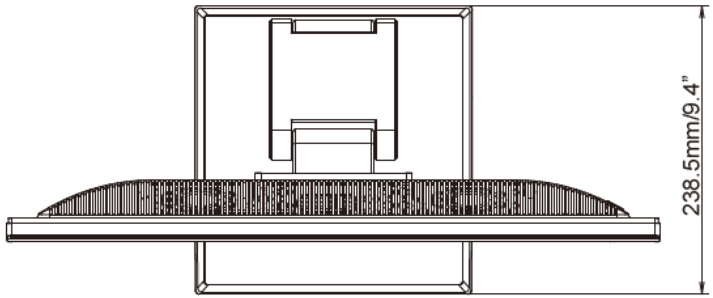
238.5mm/9.4”