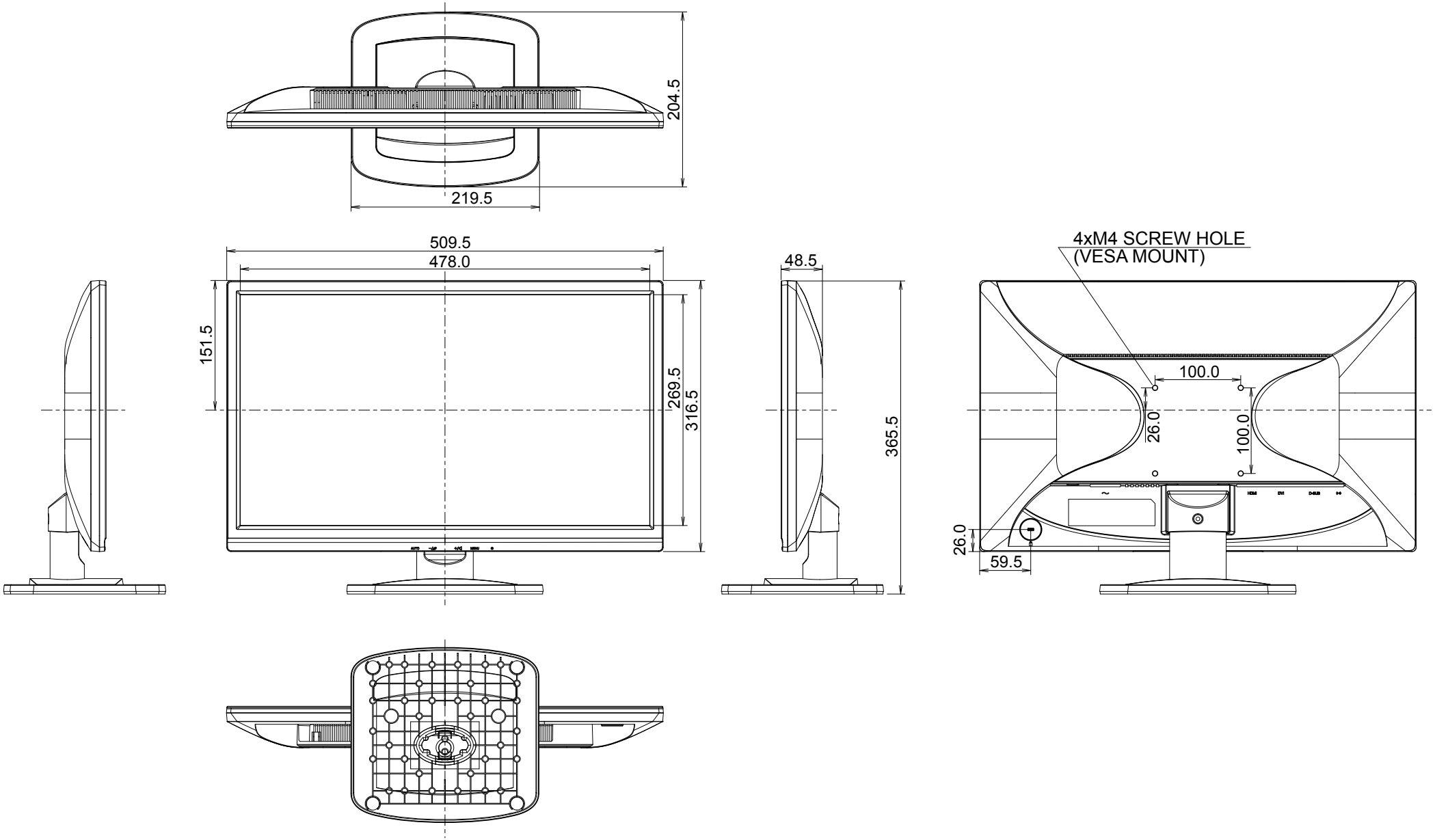
204.5
219.5
509.5
478.0
151.5
269.5
316.5
48.5
365.5
4xM4 SCREW HOLE
(VESA MOUNT)
100.0
26.0
100.0
26.0
59.5