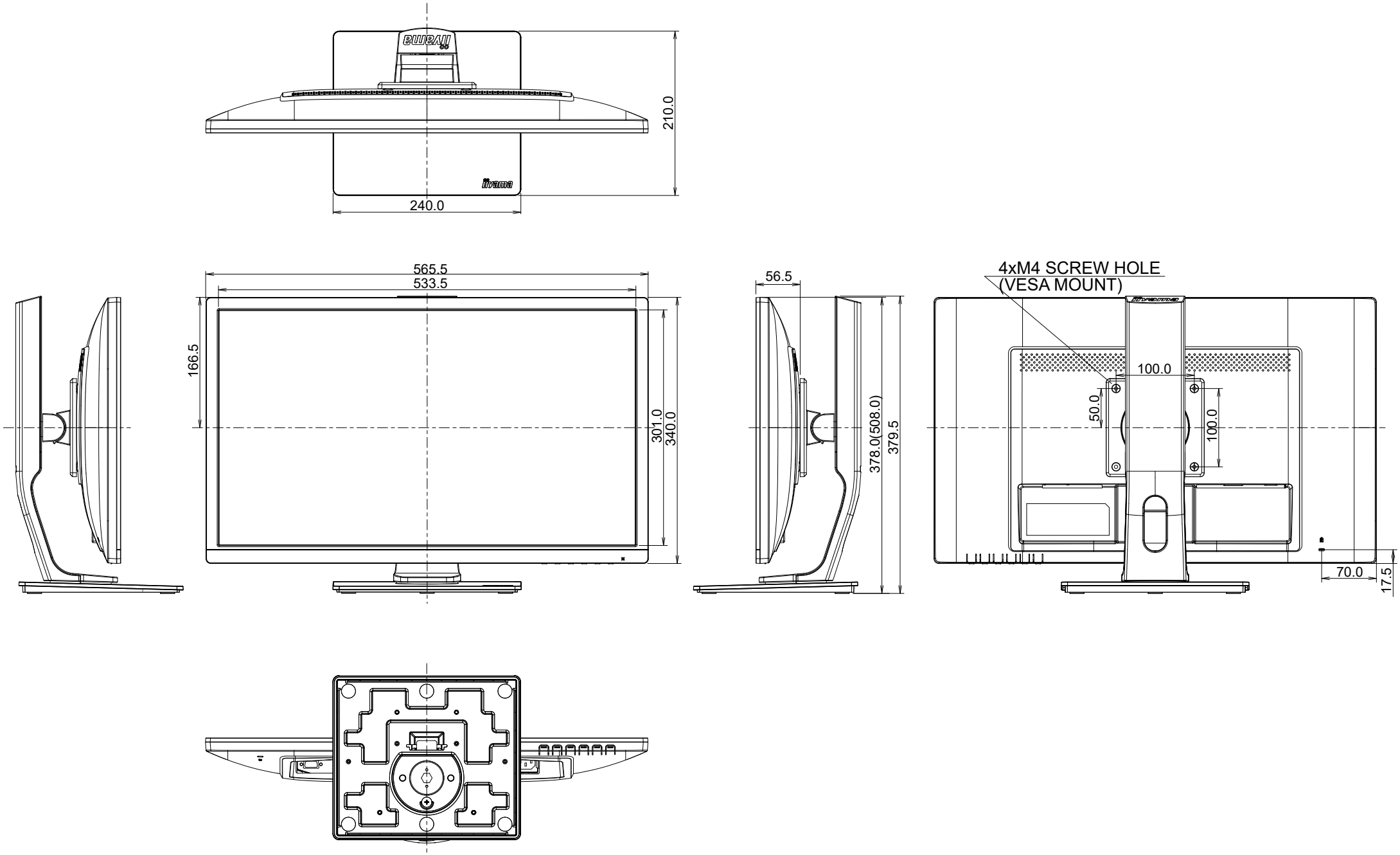
210.0
240.0
565.5
533.5
166.5
301.0
340.0
56.5
378.0(508.0)
379.5
4xM4 SCREW HOLE
(VESA MOUNT)
100.0
50.0
100.0
70.0
17.5