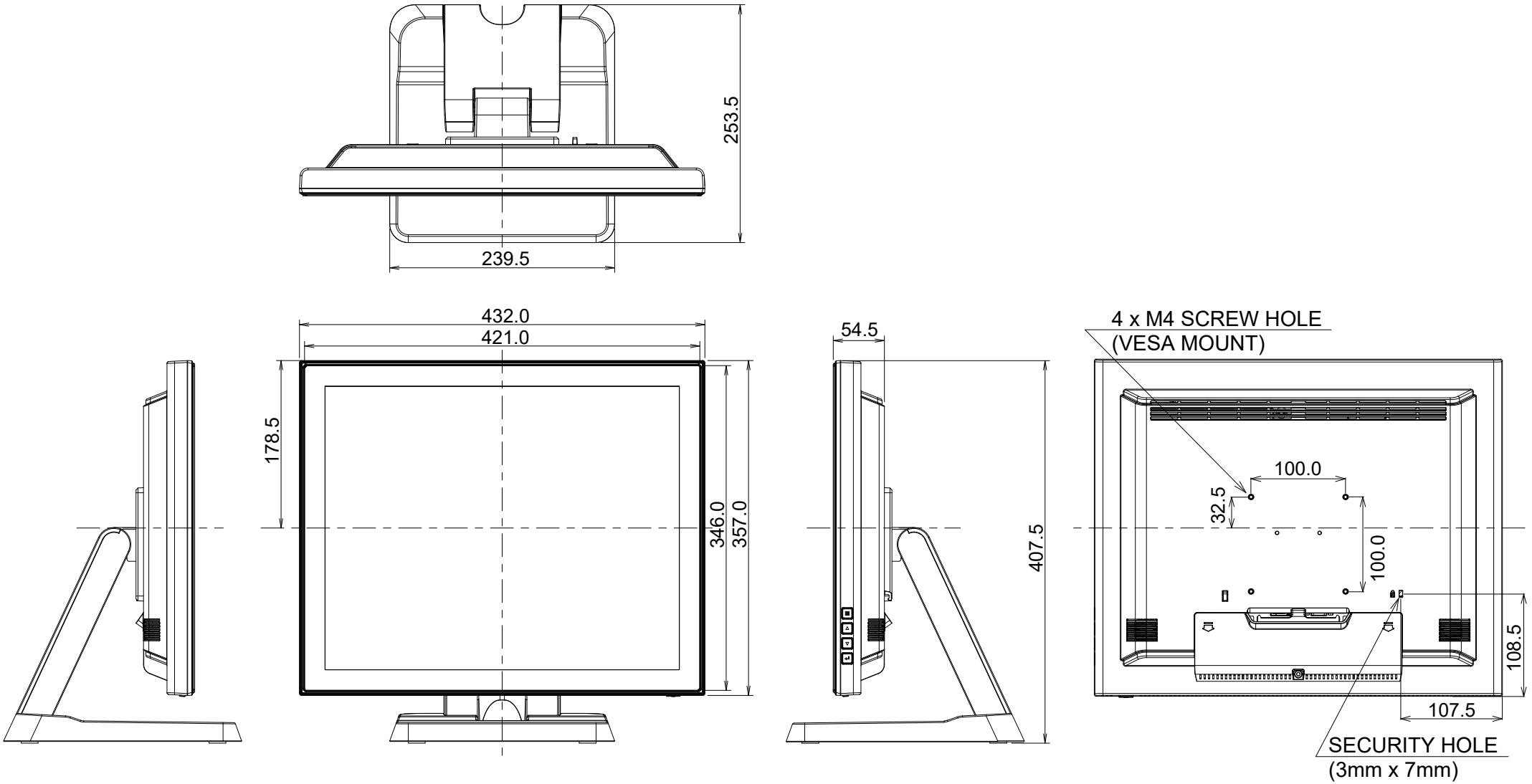
253.5
239.5
432.0
421.0
178.5
346.0
357.0
54.5
407.5
4 x M4 SCREW HOLE
(VESA MOUNT)
100.0
32.5
100.0
108.5
107.5
SECURITY HOLE
(3mm x 7mm)