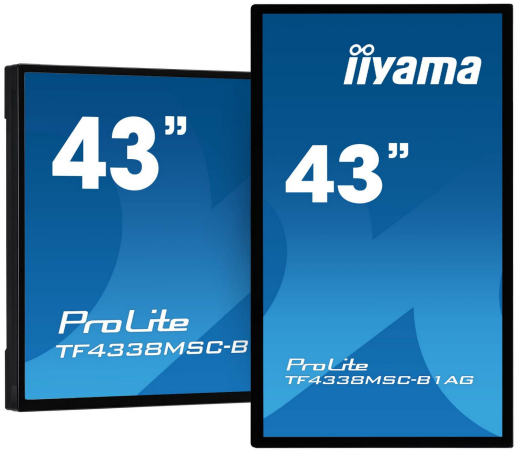

FACE-UP | 24/7 | 12 | AG Coating | DISPLAY PORT | LED | Remote | HDMI | Full HD | DVI | USB RS323C | VESA

43" 12pt Open Frame touch monitor with edge-to-edge glass

The Full HD (1920x1080) Open Frame TF4338MSC is the ideal interactive display solution for education, kiosks, interactive Digital Signage and in-store communications. The Projective Capacitive (PCAP) touch technology with 12 touch points ensures a seamless and accurate touch response. Featuring a metal housing with 60950-1 ball-drop proof, scratch-resistant, edge-to-edge glass and an IPS panel; this display can be used in landscape, portrait and face-up orientation in the most demanding environments for maximum flexibility and accessibility. Either as a stand-alone wall mounted solution or built-in a desk or kiosk thanks to its Open Frame mounting holes.

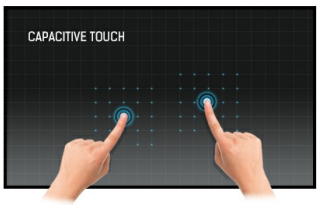

Touch technology - Capacitive

This technology uses a sensor-grid of micro-fine wires integrated into the glass that covers the screen. Touch is detected because electrical characteristics of the sensor grid change when human finger is placed on the glass. Thanks to the glass overlay this technology is highly durable, and the touch function remains unaffected even if the glass is scratched. It offers perfect picture performance and will work with human finger (also latex gloved) and stylus-pen.

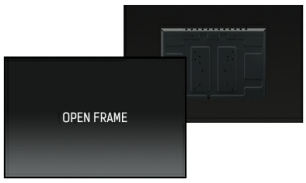

Open frame LFD

Open frame monitors feature special mounting screw holes on all sides of the monitor that can be used for installing the monitor. Open Frame monitors are an ideal solution for kiosk integrators and Instore Retail.

01 DISPLAY CHARACTERISTICS

Design	Edge to edge glass, Open Frame
Diagonal	43", 108cm
Panel	IPS LED, AG coated glass
Native resolution	1920 x 1080 @60Hz (2.1 megapixel Full HD)
Aspect ratio	16:9
Panel brightness	450 cd/m²
Brightness	380 cd/m² with touch
Light transmittance	84%
Static contrast	1100:1
Response time (GTG)	12ms
Viewing zone	horizontal/vertical: 178°/178°, right/left: 89°/89°, up/down: 89°/89°
Colour support	16.7mln
Horizontal Sync	30 - 83kHz
Viewable area W x H	529.41 x 941.18mm, 20.8 x 37.1"
Pixel pitch	0.4902mm
Bezel colour and finish	black, matte

02 TOUCH

Touch technology	projective capacitive
Touch points	12 (HID, only with supported OS)
Touch method	stylus, finger, glove (latex)
Touch interface	USB
Supported operating systems	All iiyama monitors are Plug & Play and compatible with Windows and Linux. For details regarding the supported OS for the touch models, please refer to the driver instruction file available in the downloads section.
Palm rejection	yes

03 INTERFACES / CONNECTORS / CONTROLS

Analog signal input	VGA x1
Digital signal input	DVI x1 (v.1.0) HDMI x2 (v.1.4) DisplayPort x1 (v.1.4)
Audio input	Mini jack x1
Monitor control input	RS-232c x1 (Get/Set Command) RJ45 (LAN) x1 IR x1
Audio output	Mini jack x1 Speakers 2 x 8W
HDCP	yes

04 FEATURES

Kiosk mode	yes
Max. non-stop operating time	24/7
Glass thickness	3mm
60950 Ball drop test	yes
Water and dust protection	IP54 (front)

Housing (bezel)	metal
OSD key lock	yes
Remote control lock	yes

05 GENERAL

OSD languages	EN, DE, FR, ES, IT, RU, NL, PL
Control buttons	Power, Left/Volume-, Right/Volume+, Scroll Up, Scroll Down, Menu, Enter/Input Select
User controls	picture (picture mode, backlight, contrast, brightness, chroma, phase, sharpness, color temperature, reset), sound (treble, bass, balance, volume, mute, speaker, audio source, reset), screen (aspect, adjust screen, touch feature), setting (language, schedule, power save, control settings, network settings, advanced), setting (advanced, information, all reset)
Plug&Play	DDC2B

06 MECHANICAL

Orientation	landscape, portrait, face-up
VESA mounting	400 x 200mm
Mini PC mount	NUC INTEL

07 ACCESSORIES INCLUDED

Cables	power, USB, HDMI, DP, IR-Extender
Guides	quick start guide, safety guide
Cable cover	yes
Remote control	yes (batteries included)

08 POWER MANAGEMENT

Power supply unit	internal
Power supply	AC 100 - 240V, 50/60Hz
Power usage	75W typical, 1.0W stand by, 1.0W off mode

09 SUSTAINABILITY

Regulations	CB, CE, TÜV-Bauart, RoHS support, ErP, WEEE, CU, cULus, REACH
REACH SVHC	above 0.1%: Lead

10 DIMENSIONS / WEIGHT

Product dimensions W x H x D	987.5 x 587.7 x 68mm
Weight (without box)	21.6kg
EAN code	4948570115785

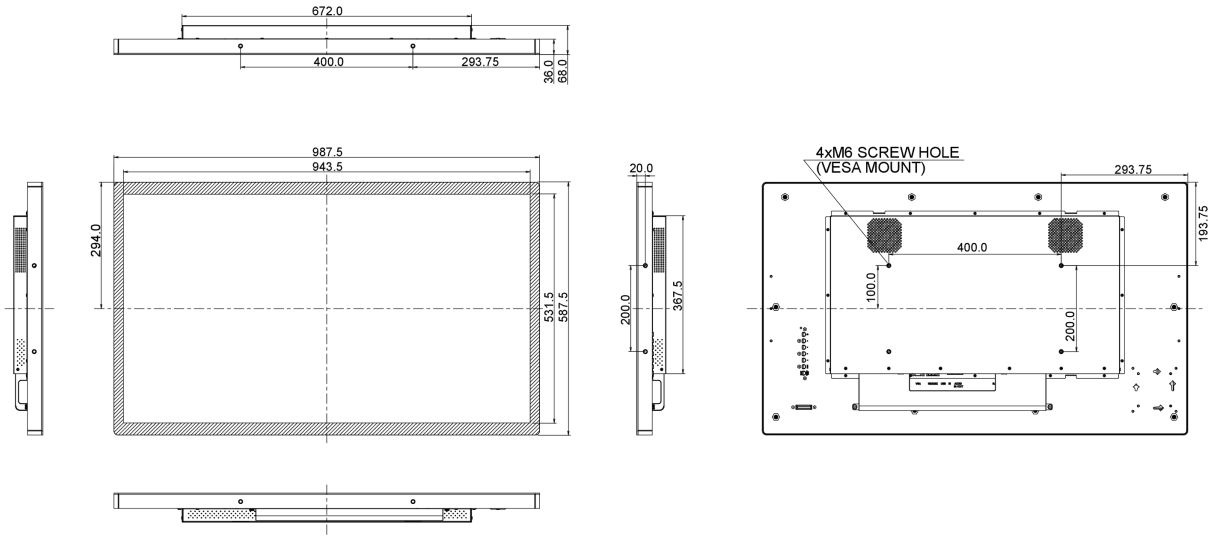

All trademarks and registered trademarks acknowledged. E & O E. Specification subject to change without notice. All LCD's comply with ISO-9241-307:2008 in connection with pixel defects.

© IIYAMA CORPORATION. ALL RIGHTS RESERVED