Simple and functional dual desktop arm

The iiyama DS1002C-B1 is a desk mount (clamp) for two flat screens up to 30". Thanks to the arm you can save space on your desk and the cable management system helps to keep your workplace tidy. Broad adjustment capabilities, including tilt, swivel, height and rotation, the arm offers, allow you to easily adjust the position of the screens to your preferences assuring comfortable and healthy body posture.

01 TECHNICAL SPECIFICATION

Type	desk mount for desktop monitor
Number of screens	2
Desk monut	desk clamp
Screen size	10" - 30"
Height adjustment	200 - 400mm
Screen rotation	PIVOT 90°
Tilt	-85° - 15°
Swivel	180°
Max weight capacity	10kg / monitor
VESA minimum	75 x 75mm
VESA maximum	100 x 100mm

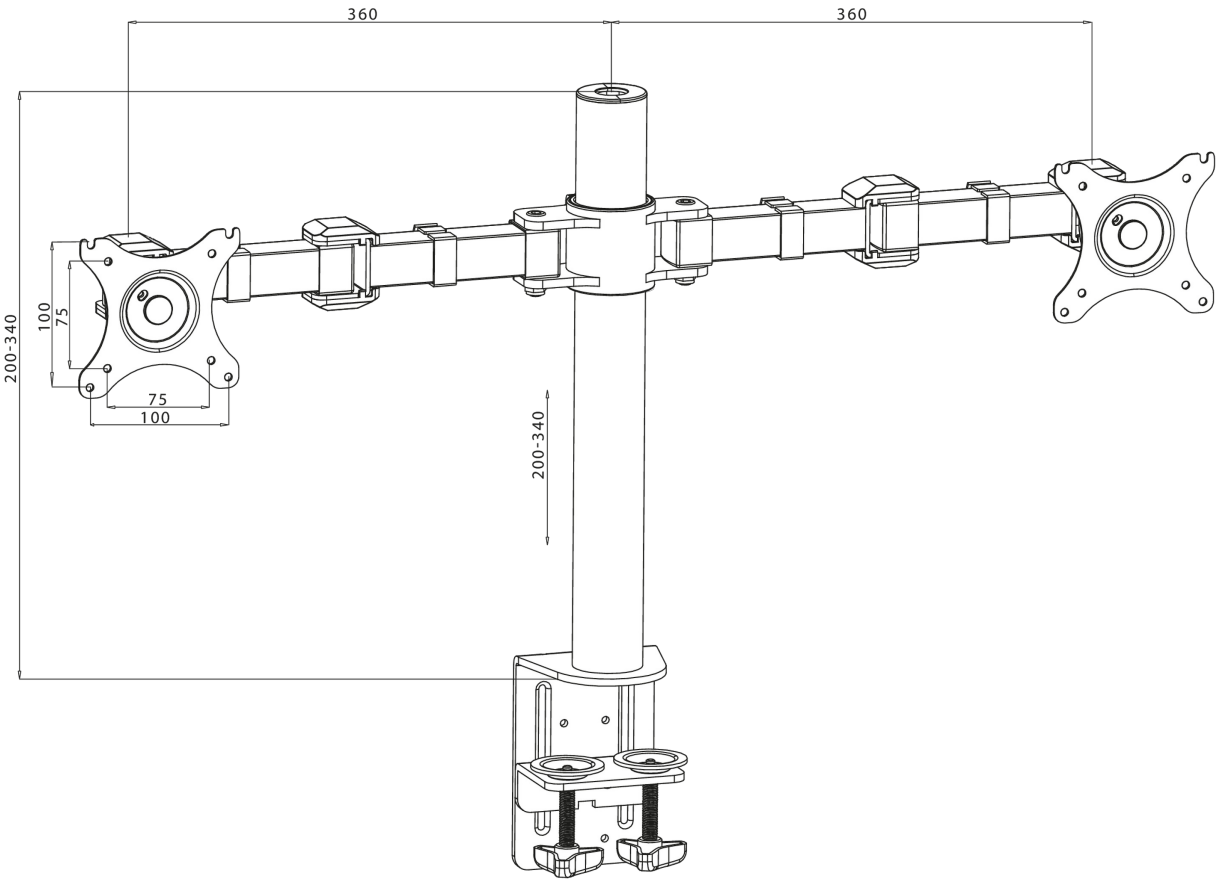

02 DIMENSIONS / WEIGHT

EAN code	4948570032082

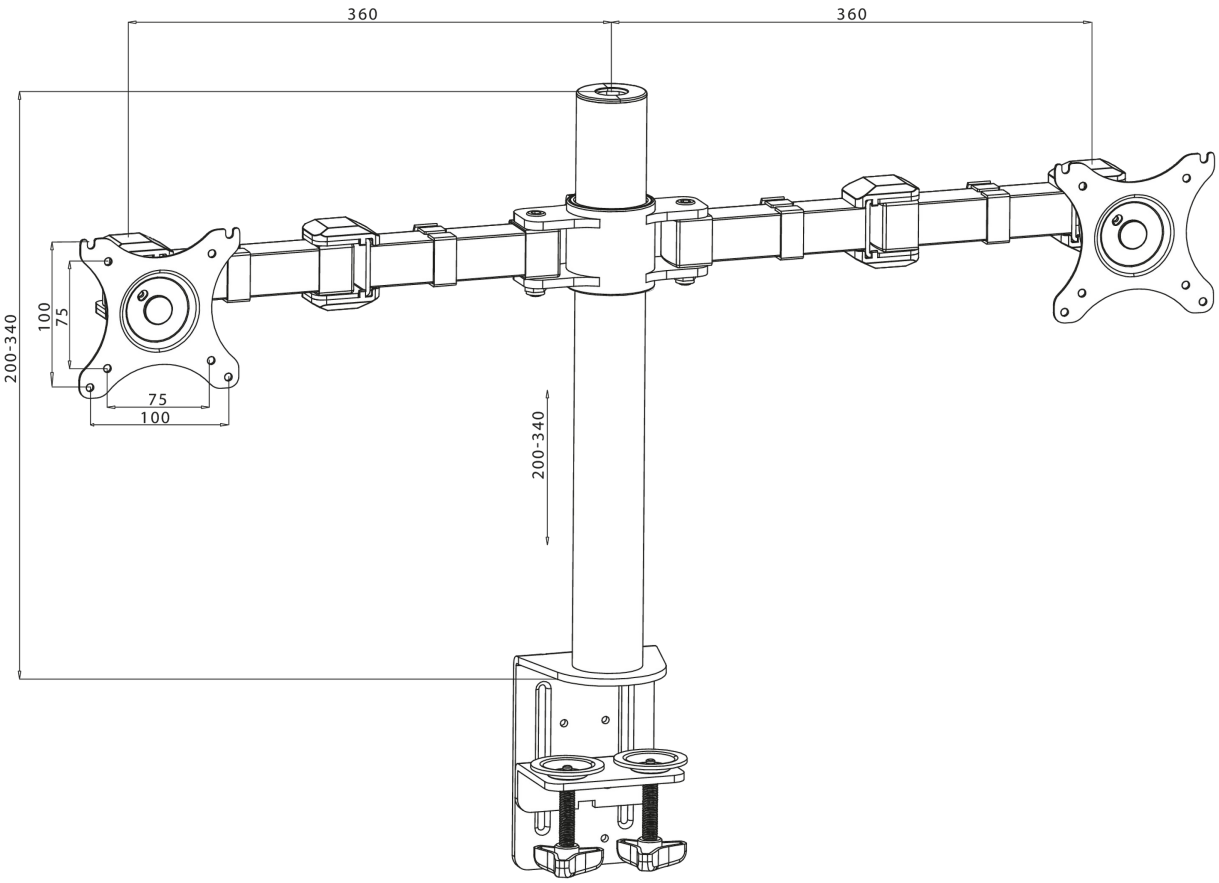

All trademarks and registered trademarks acknowledged. E & O E. Specification subject to change without notice. All LCD's comply with ISO-9241-307:2008 in connection with pixel defects.

© IIYAMA CORPORATION. ALL RIGHTS RESERVED