Simple and functional dual desktop arm

The iiyama DS1002C-B1 is a desk mount (clamp) for two flat screens up to 30". Thanks to the arm you can save space on your desk and the cable management system helps to keep your workplace tidy. Broad adjustment capabilities, including tilt, swivel, height and rotation, the arm offers, allow you to easily adjust the position of the screens to your preferences assuring comfortable and healthy body posture.

01 ESPECIFICACIÓN TÉCNICA

Tipo	desk mount for desktop monitor
Número de pantallas	2
Soporte de escritorio	desk clamp
Tamaño de pantalla	10" - 30"
Ajuste de altura	200 - 400mm
Rotación de pantalla	PIVOT 90°
inclinación	-85° - 15°
giro	180°
Peso máximo	10kg / monitor
VESA minimum	75 x 75mm
VESA maximum	100 x 100mm

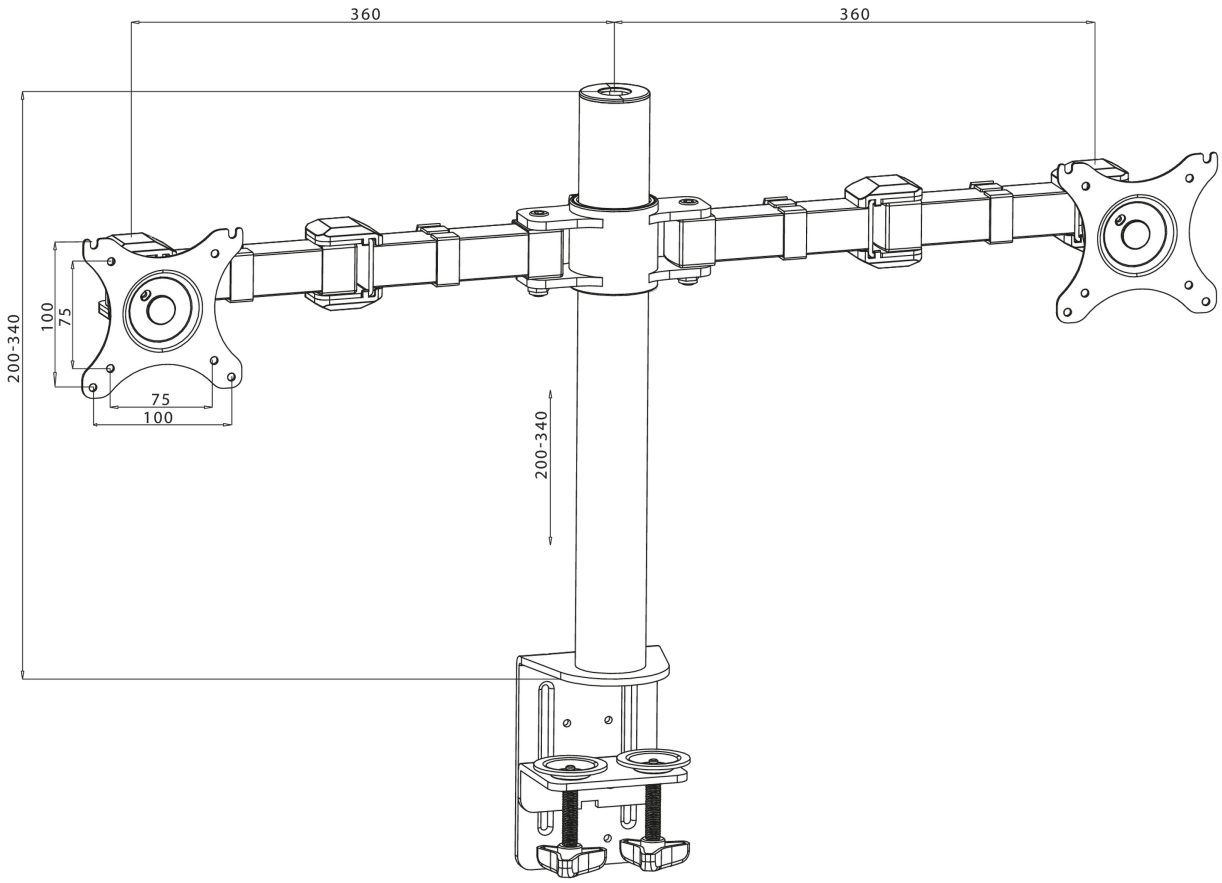

02 DIMENSIONES / PESO

Código EAN	4948570032082

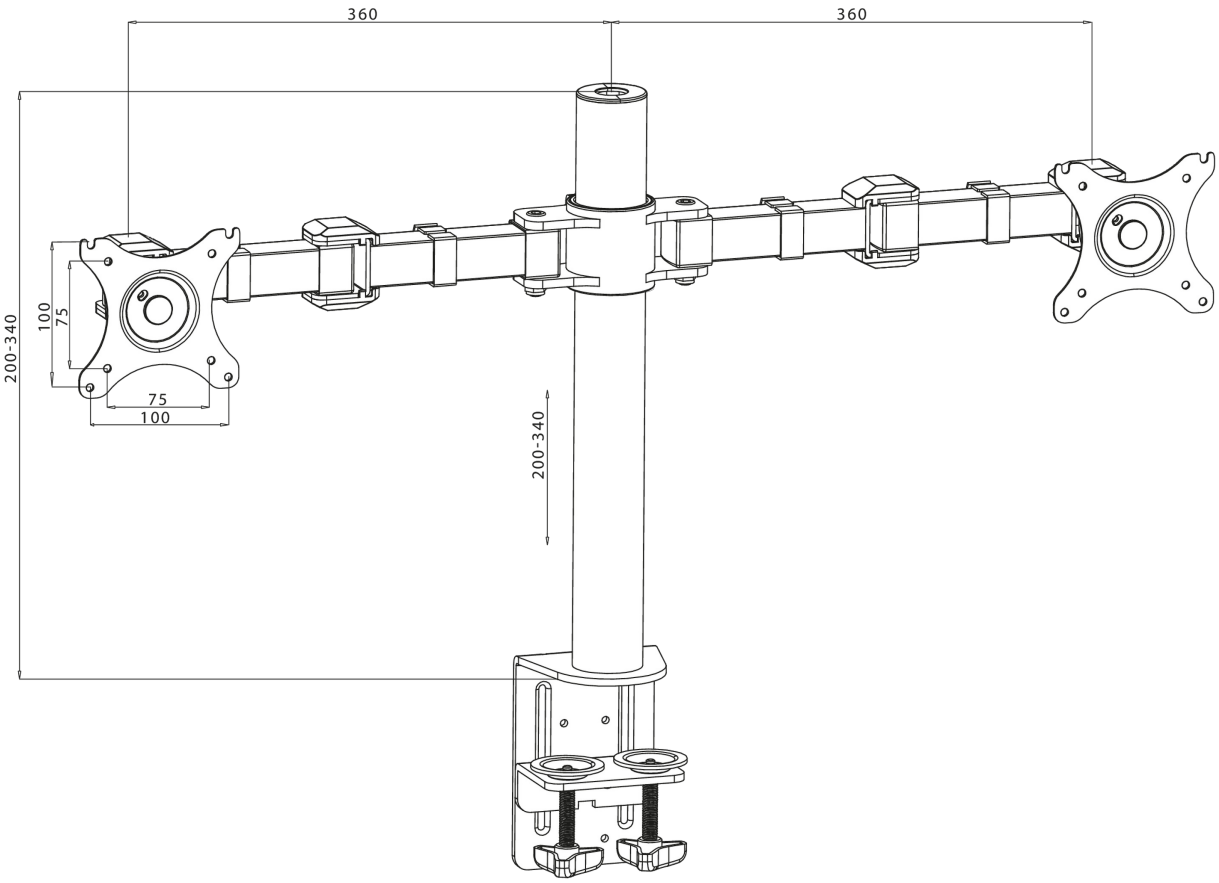

All trademarks and registered trademarks acknowledged. E & O E. Specification subject to change without notice. All LCD's comply with ISO-9241-307:2008 in connection with pixel defects.

© IIYAMA CORPORATION. ALL RIGHTS RESERVED