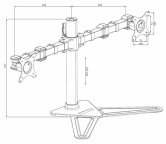

Comfortable dual desktop stand

The iiyama DS1002D-B1 is a desk mount stand for two flat screens up to 30”. The monitor arm allows you to save space on your desk reducing the number of stands to one only and the cable management system makes it easier to keep your workplace tidy. The easy to set-up stand offers broad adjustment capabilities, including tilt, swivel, height and rotation, so you can easily adjust the position of both screens to your preferences assuring comfortable and healthy body posture.

01 TECHNICAL SPECIFICATION

Type	desk stand for desktop monitor
Number of screens	2
Desk monut	stand
Screen size	10" - 30"
Height adjustment	200 - 340mm
Screen rotation	PIVOT 90°
Tilt	-85° - 15°
Swivel	180°
Max weight capacity	10kg / monitor
VESA minimum	75 x 75mm
VESA maximum	100 x 100mm

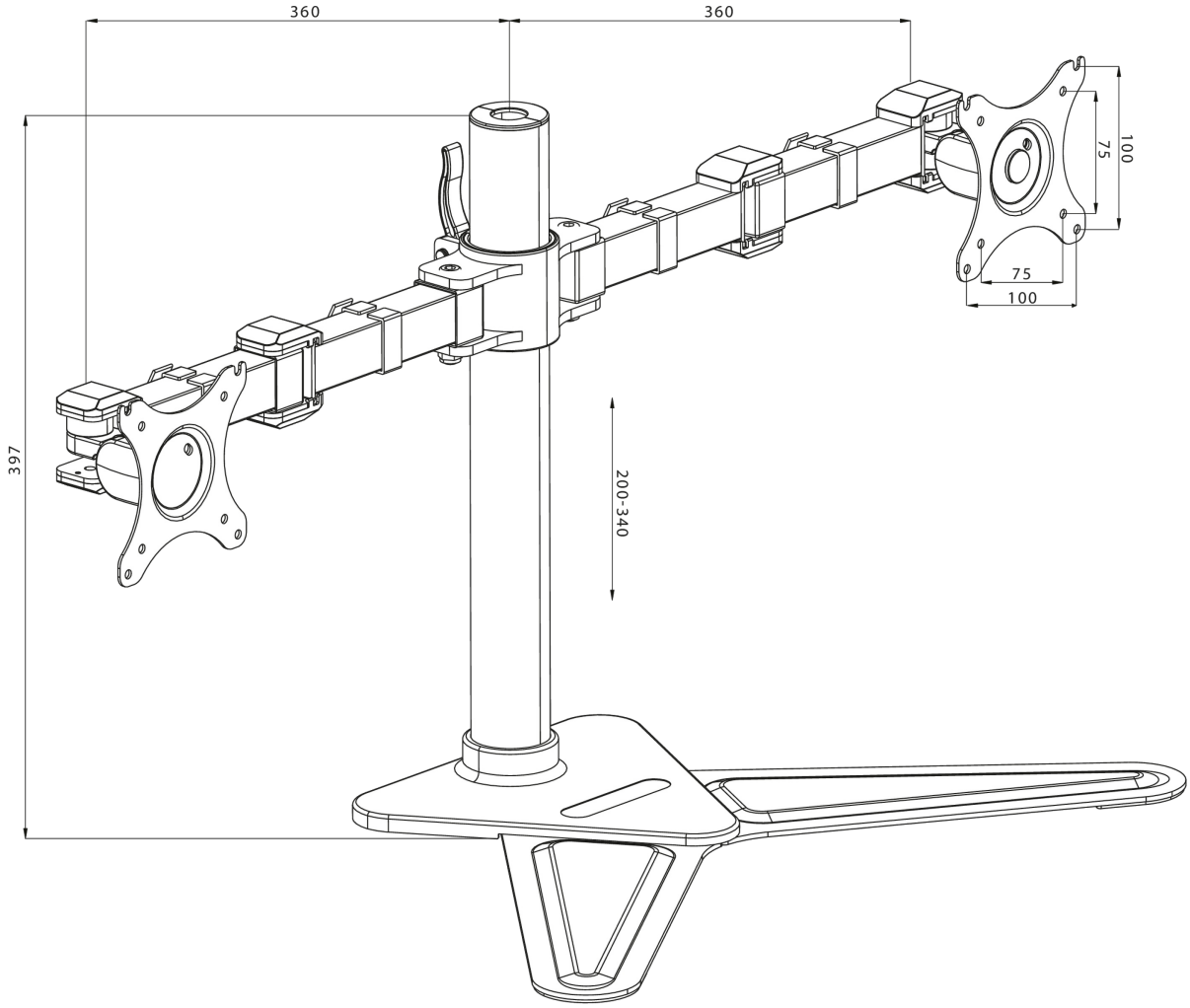

02 DIMENSIONS / WEIGHT

EAN code	4948570032068

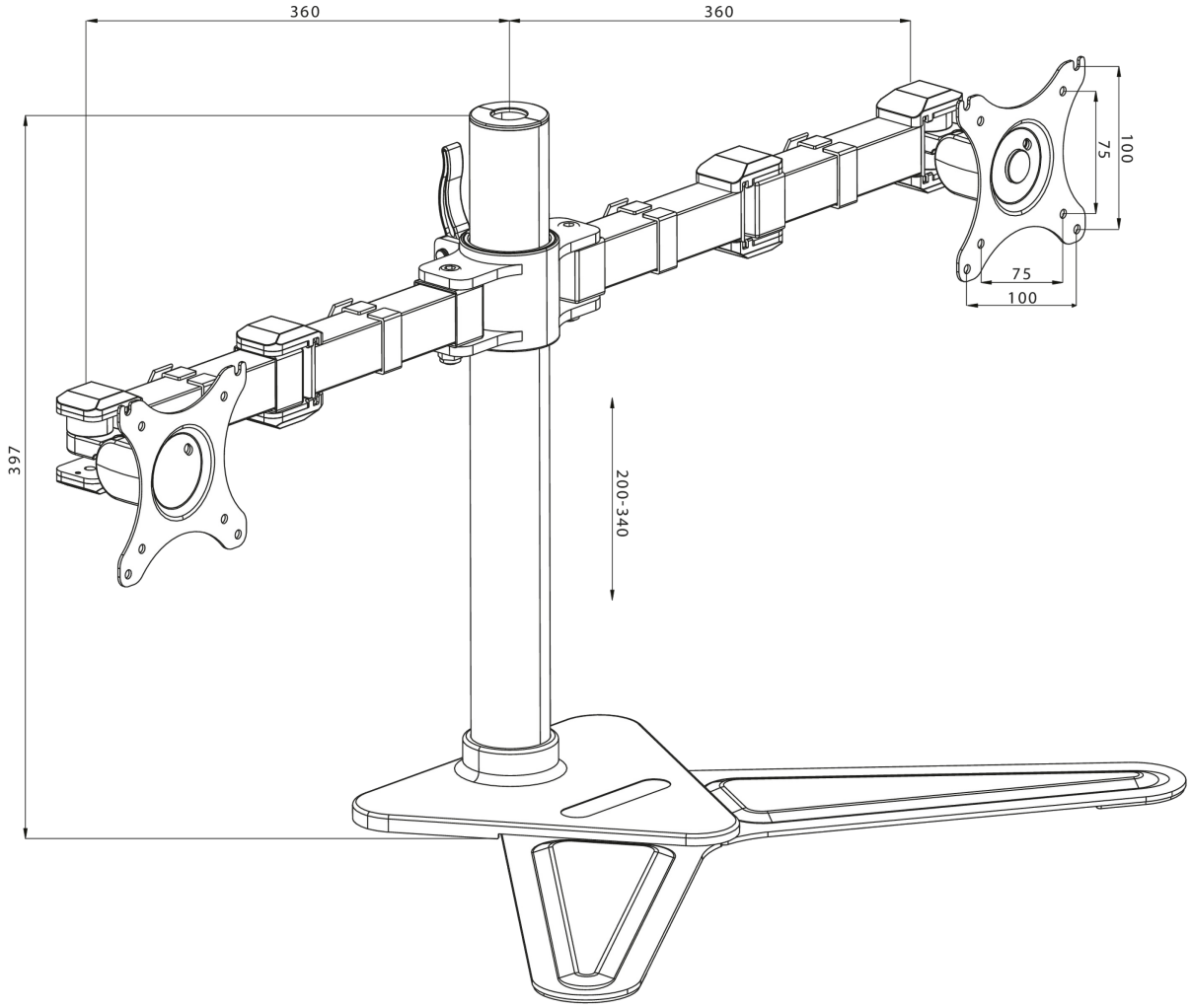

All trademarks and registered trademarks acknowledged. E & O E. Specification subject to change without notice. All LCD's comply with ISO-9241-307:2008 in connection with pixel defects.

© IIYAMA CORPORATION. ALL RIGHTS RESERVED