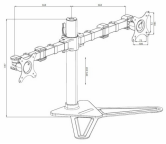

## Comfortable dual desktop stand

The iiyama DS1002D-B1 is a desk stand for two flat screens up to 30”. The device allows you to save space on your desk reducing the number of stands to one only and the cable management system makes it easier to keep your workplace tidy. The easy to set-up stand offers broad adjustment capabilities, including tilt, swivel, height and rotation, so you can easily adjust the position of both screens to your preferences assuring comfortable and healthy body posture.

## 01 ESPECIFICACIÓN TÉCNICA

| | |
|---|---|
| **Tipo** | desk stand for desktop monitor |
| **Número de pantallas** | 2 |
| **Soporte de escritorio** | stand |
| **Tamaño de pantalla** | 10" - 30" |
| **Ajuste de altura** | 200 - 340mm |
| **Rotación de pantalla** | PIVOT 90° |
| **inclinación** | -85° - 15° |
| **giro** | 180° |
| **Peso máximo** | 10kg / monitor |
| **VESA minimum** | 75 x 75mm |
| **VESA maximum** | 100 x 100mm |

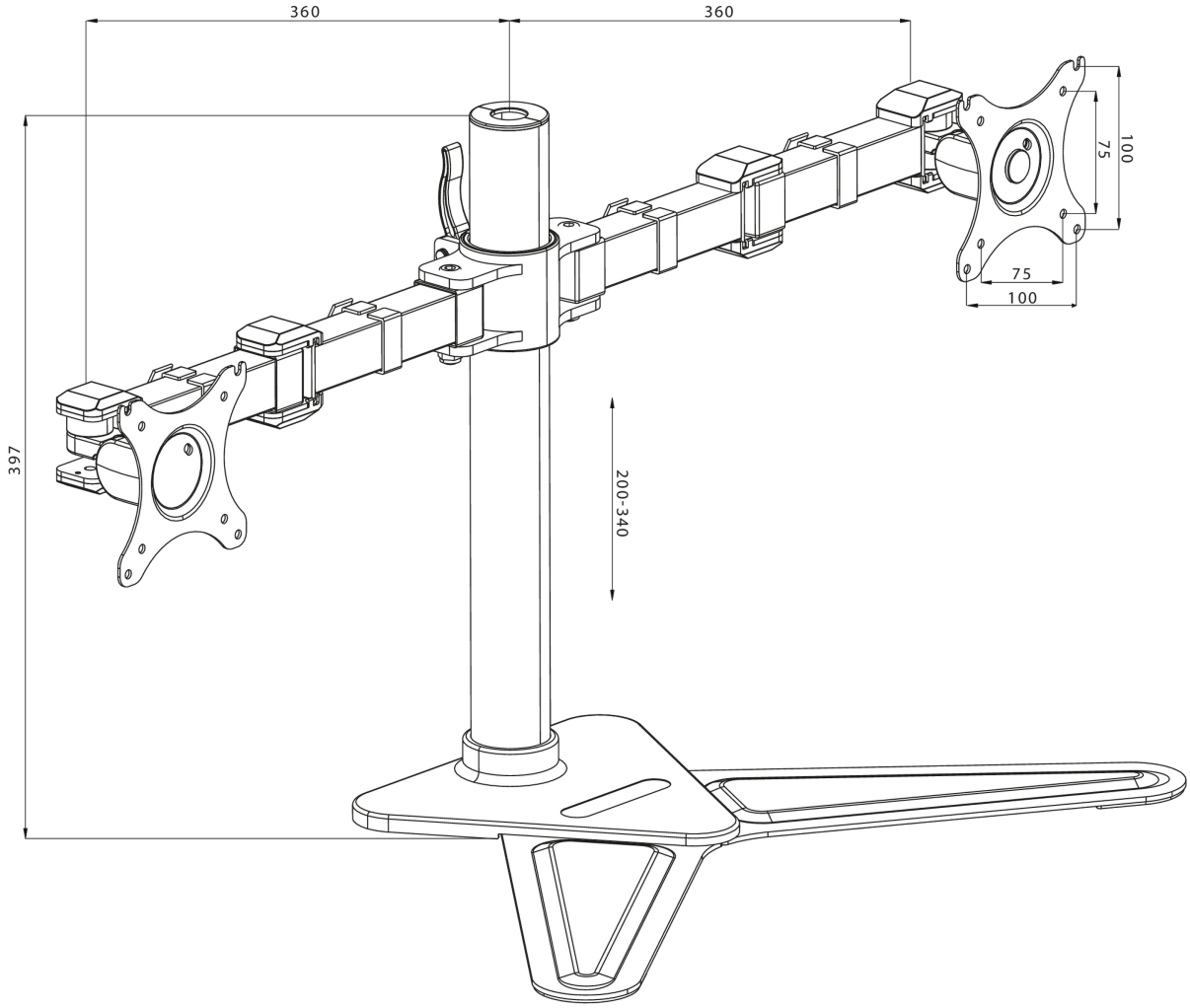


## 02 DIMENSIONES / PESO

| | |
|---|---|
| **Código EAN** | 4948570032068 |

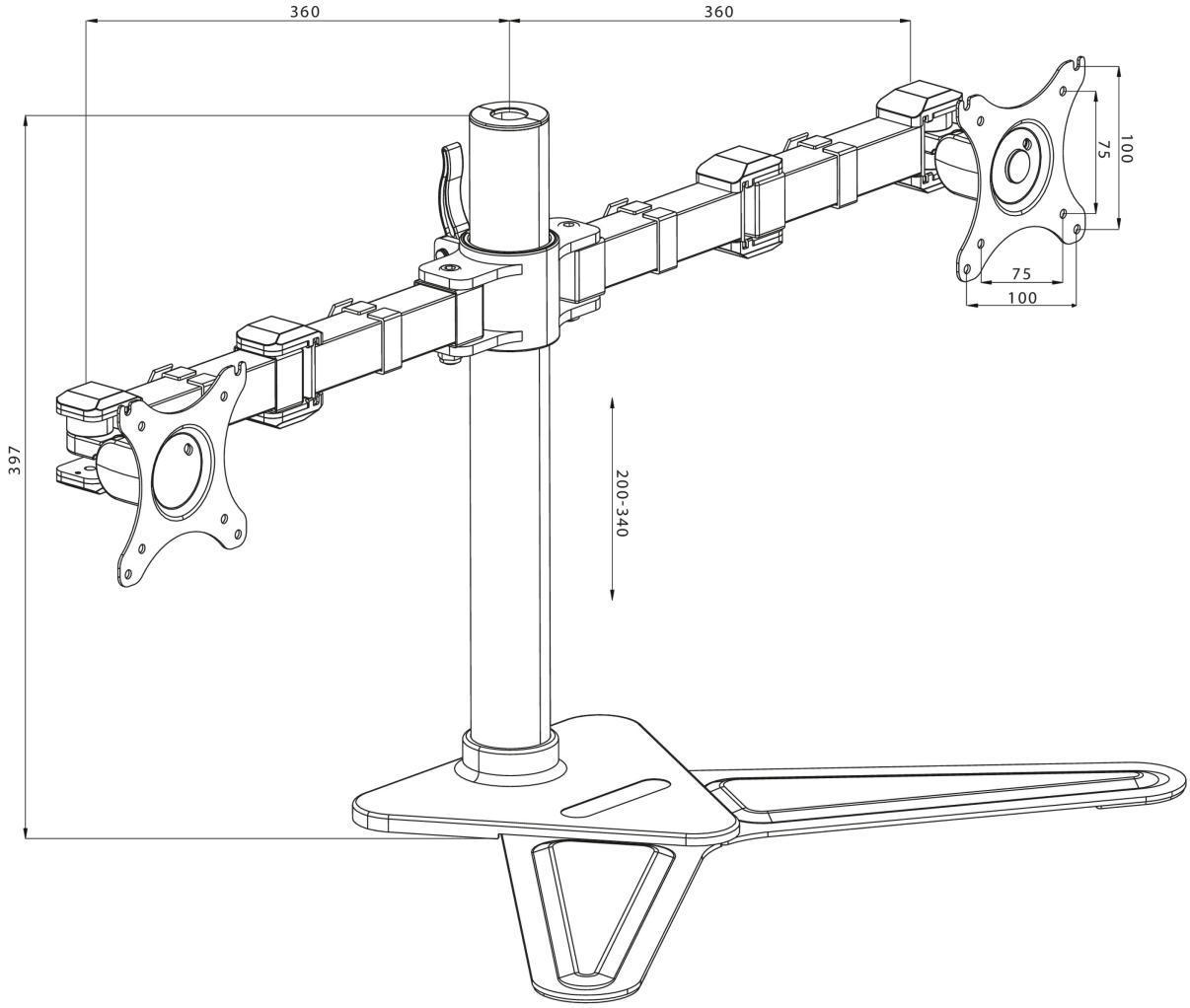


*All trademarks and registered trademarks acknowledged. E & O E. Specification subject to change without notice. All LCD's comply with ISO-9241-307:2008 in connection with pixel defects.*

© IIYAMA CORPORATION. ALL RIGHTS RESERVED