Red Eagle – join the PRO squad

Whether you already are or are aiming to be a hardcore gamer, the 27'' G-MASTER GB2760HSU known as Red Eagle is the competitive edge you need to be able to unleash your full gaming potential. Armed with FreeSync technology, 144Hz refresh rate and a blistering 1ms response time you can make split second decisions and forget about ghosting effects or smearing issues. The ability to adjust brightness and the dark shades with the Black Tuner delivers greater viewing performance in shadowed areas. Nothing will skip your attention. Dual input setup (HDMI, DisplayPort), speakers, headphone connector and a 2.0 USB hub are all included. No matter which you prefer: RTS, FPS, MOBA and MMO – with the Red Eagle on your desk you are top of the gamer community food chain.

144Hz

Rapid refresh rate and frame rate guarantee smooth, blur free and judder free graphics, with lower latency and lag improving response times for fast paced games. Especially suited to the fast pace games like FPS, racers, MOBA and sports where the 144Hz refresh rate delivers the crisp and sharp images needed to raise your game.

FreeSync™ Technology

01 DISPLAY CHARACTERISTICS

Diagonal	27", 68.6cm
Panel	TN LED, matte finish
Native resolution	1920 x 1080 @144Hz (2.1 megapixel Full HD)
Aspect ratio	16:9
Panel brightness	400 cd/m²
Static contrast	1000:1
Advanced contrast	80M:1
Response time (GTG)	1ms
Viewing zone	horizontal/vertical: 170°/160°, right/left: 85°/85°, up/down: 80°/80°
Colour support	16.7mln (sRGB: 99%; NTSC: 72%)
Horizontal Sync	30 - 167kHz
Viewable area W x H	597.6 x 336.15mm, 23.5 x 13.2"
Pixel pitch	0.311mm
Colour	matte

02 INTERFACES / CONNECTORS / CONTROLS

Signal input	HDMI x1 (v.1.4) DisplayPort x1 (v.1.2)
USB HUB	x2 (v.2.0)
HDCP	yes
Headphone connector	yes

03 FEATURES

Blue light reducer	yes
Flicker free	yes
Adaptive Sync support	1920 x 1080 @30-144Hz
OSD languages	EN, DE, FR, ES, IT, RU, JP, CZ, NL, PL
Control buttons	Power, Menu/ Select, Scroll down/ Volume, Scroll up/ ECO Mode, Exit, Input
User controls	picture adjust (contrast, brightness, OverDrive, ACR, ECO, Blue Light Reducer, Black Tuner, colour saturation, gamma), input select, audio adjust (volume, mute), store user settings, colour adjust, manual image adjust (i-style Colour, sharp&soft, HDMI RGB range, Direct Drive Mode, video mode adjust), language, setup menu (OSD position, OSD time out, opening logo, FreeSync), display information, reset
Speakers	2 x 2W
Convenience	Kensington-lock™ prepared, DDC2B, Mac OSX

04 MECHANICAL

Display position adjustments	height, pivot (rotation), swivel, tilt
Height adjustment	130mm
Rotation (PIVOT function)	90°
Swivel stand	90°; 45 ° left; 45° right
Tilt angle	22° up; 5° down
VESA mounting	100 x 100mm

05 ACCESSORIES INCLUDED

Cables	power (1.5m), USB (1.5m), HDMI (1.5m)
Other	quick start guide, safety guide

06 POWER MANAGEMENT

Power supply unit	internal
Power supply	AC 100 - 240V, 50/60Hz
Power usage	27.1W typical, 0.37W stand by, 0.32W off mode

07 SUSTAINABILITY

Regulations	CE, TÜV-GS, RoHS support, ErP, WEEE, EPEAT, CU, REACH
Energy efficiency class (Regulation (EU) 2017/1369)	G
EPEAT Silver	EPEAT is a comprehensive environmental rating that helps identify greener computers and other electronic equipment. The Silver certification means the monitor meets all required criteria plus at least 50% of the optional requirements. EPEAT Silver is valid in countries where iiyama registers the product. Please visit www.epeat.net for the registration status in your country.
REACH SVHC	above 0.1%: Lead

08 DIMENSIONS / WEIGHT

Product dimensions W x H x D	613.5 x 412 (542) x 230mm
Weight (without box)	7.4kg
EAN code	4948570116409

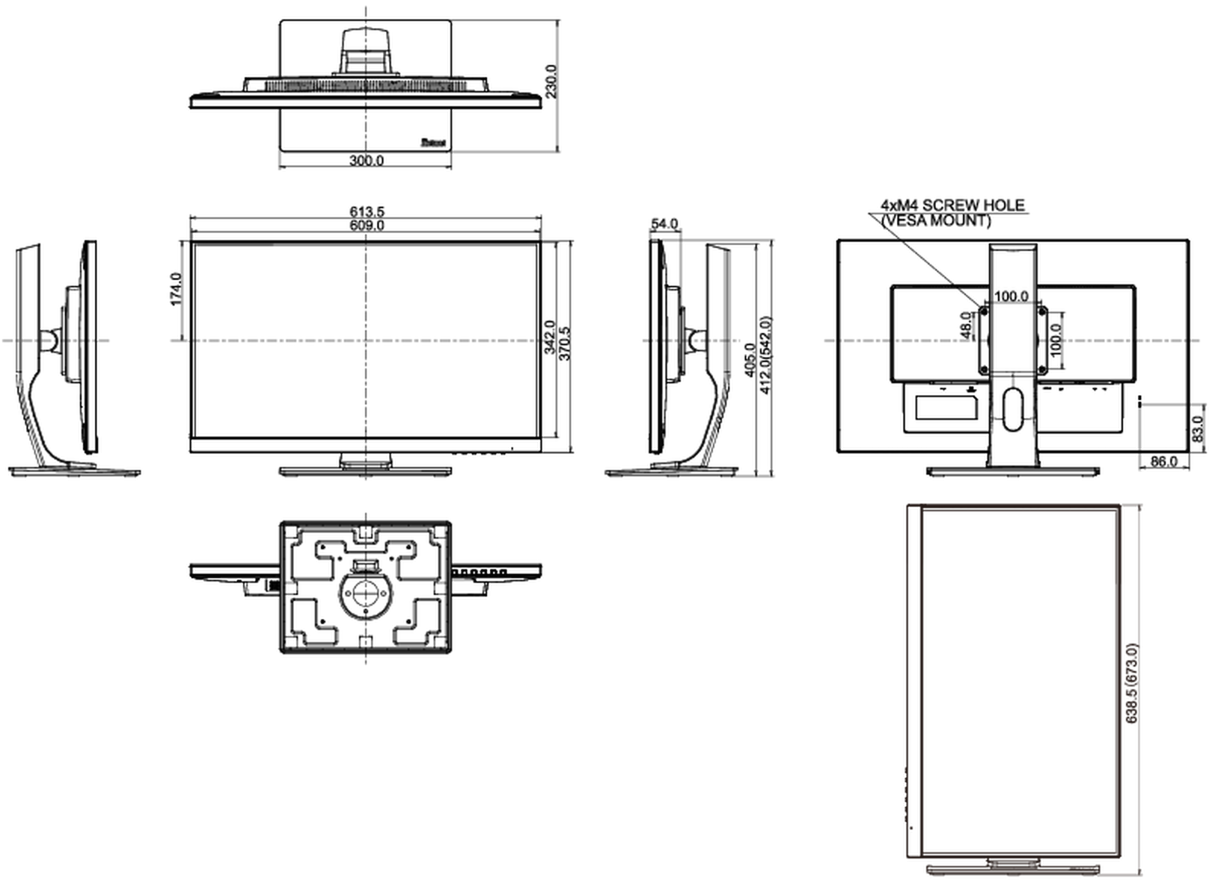

All trademarks and registered trademarks acknowledged. E & O E. Specification subject to change without notice. All LCD's comply with ISO-9241-307:2008 in connection with pixel defects.

© IIYAMA CORPORATION. ALL RIGHTS RESERVED