E | 0.8 ms | FAST IPS | 165 Hz | Free Sync | DISPLAY PORT | X-Res Tech | HDMI | ECO | USB HUB | VESA

Unleash your full gaming potential with the Fast IPS G2470HSU Red Eagle

Get the competitive edge you need to unleash your full gaming potential with the 24'' G2470HSU offering 0.8ms MPRT and 165Hz refresh rate. Armed with FreeSync Premium you can make split second decisions and forget about ghosting effects or smearing issues. The ability to adjust brightness and the dark shades with the Black Tuner delivers greater viewing performance in shadowed areas and the IPS panel technology guarantees superb image quality.

Fast IPS

The Fast IPS panel technology guarantees not only high-fidelity, vivid battleground scenes displayed with outstanding colour accuracy but provides also an outstanding 0.8ms Moving Picture Response Time (MPRT).

FreeSync™ Premium Technology

This monitor guarantees low input latency and low framerate compensation putting an end to any tearing or stuttering issues at virtually any framerate.

01 DISPLAY CHARACTERISTICS

Diagonal	23.8", 60.5cm
Panel	Fast IPS IGZO, matte finish
Native resolution	1920 x 1080 @165Hz (2.1 megapixel Full HD, DisplayPort)
Aspect ratio	16:9
Panel brightness	250 cd/m²
Static contrast	1100:1
Advanced contrast	80M:1
Response time (MPRT)	0.8ms
Viewing zone	horizontal/vertical: 178°/178°, right/left: 89°/89°, up/down: 89°/89°
Colour support	16.7mln 8bit
Horizontal Sync	15 - 225kHz
Viewable area W x H	527 x 296.5mm, 20.7 x 11.7"
Pixel pitch	0.275mm
Colour	matte, black

02 INTERFACES / CONNECTORS / CONTROLS

Signal input	HDMI x1 (v.1.4, max. 1920 x 1080 @144Hz) DisplayPort x1 (v.1.2, max. 1920 x 1080 @165Hz)
USB HUB	x2 (v.2.0 DC5V, 500mA)
HDCP	yes
Headphone connector	yes

03 FEATURES

Blue light reducer	yes
Flicker free	yes
Adaptive Sync support	FreeSync Premium - HDMI: 1920 x 1080 @48-144Hz, DP: 1920 x 1080 @48-165Hz
OSD languages	EN, DE, FR, ES, IT, PT, RU, JP, CZ, NL, PL
Control buttons	Signal select/ Exit, +/ Volume, -/ i-Style Colour, Menu, Power
User controls	picture adjust (contrast, brightness, overdrive, ACR, ECO, blue light reducer, Black Tuner, MBR, gamma), input select, audio adjust (volume, mute), store user settings, colour settings (colour temperature, 6-Axis, user preset), image adjust (i-Style colour, X-Res Technology, sharp & soft, HDMI RGB range, direct drive mode, video mode adjust), language, setup menu (OSD H. position, OSD V. position, OSD time out, opening logo, AMD FreeSync Premium, LED), display information, reset
Speakers	2 x 2W
Convenience	Kensington-lock™ prepared, DDC2B, Mac OSX

04 MECHANICAL

Display position adjustments	tilt
Tilt angle	21.5° up; 3.5° down
VESA mounting	100 x 100mm
Cable management system	yes

05 ACCESSORIES INCLUDED

Cables	power, USB, HDMI, DP
Other	quick start guide, safety guide

06 POWER MANAGEMENT

Power supply unit	internal
Power supply	AC 100 - 240V, 50/60Hz
Power usage	20W typical, 0.5W stand by, 0.3W off mode

07 SUSTAINABILITY

Regulations	CE, TÜV-Bauart, EAC, PSE, RoHS support, ErP, WEEE, VCCI, REACH
Energy efficiency class (Regulation (EU) 2017/1369)	E
REACH SVHC	above 0.1%: Lead

08 DIMENSIONS / WEIGHT

Product dimensions W x H x D	539.5 x 415 x 187.5mm
Box dimensions W x H x D	610 x 413 x 146mm
Weight (without box)	3.2kg
Weight (with box)	4.8kg
EAN code	4948570117727

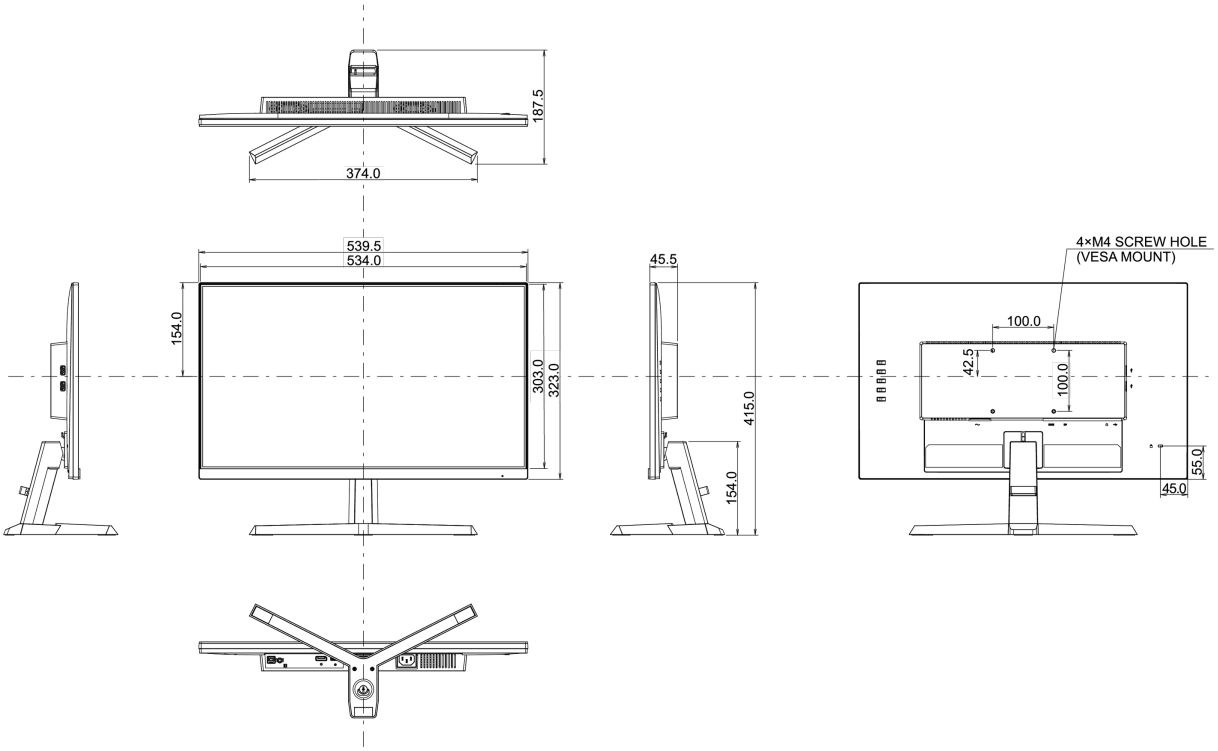

All trademarks and registered trademarks acknowledged. E & O E. Specification subject to change without notice. All LCD's comply with ISO-9241-307:2008 in connection with pixel defects.

© IIYAMA CORPORATION. ALL RIGHTS RESERVED