E | 165 Hz | CURVED | Free Sync | DISPLAY PORT | HDMI | ECO | USB HUB | VESA

Immerse yourself in the game with the curved GB2766HSU with FreeSync Premium

The 1500R curved VA panel with 165Hz refresh rate, 1ms MPRT and 1920x1080 resolution allows an immersive viewing experience with excellent image quality.

You can also customize the screen settings using the predefined and custom gaming modes. The Black Tuner function gives you total control over the dark scenes ensuring that the details are always clearly visible. Thanks to the height adjustable stand you can easily adjust the screen position to your preferences to ensure comfort during marathon gaming sessions.

Available also with fixed stand : G-Master G2766HSU-B1

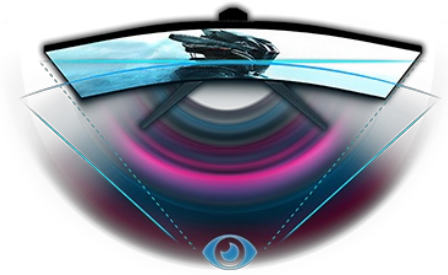

CURVED DESIGN 1500R

The 1500R curvature of the screen guarantees a realistic and comfortable viewing experience allowing you to really immerse yourself in the game.

1ms

Fast response time is key to ultra-smooth gaming. It reduces ghosting and blurring providing the user with an improved graphic performance.

01 DISPLAY CHARACTERISTICS

Diagonal	27", 68.5cm
Panel	VA LED, matte finish
Curved	1500R
Native resolution	1920 x 1080 @165Hz (2.1 megapixel Full HD)
Aspect ratio	16:9
Panel brightness	250 cd/m²
Static contrast	3000:1
Advanced contrast	80M:1
Response time (MPRT)	1ms
Viewing zone	horizontal/vertical: 178°/178°, right/left: 89°/89°, up/down: 89°/89°
Colour support	16.7mln
Horizontal Sync	30 - 184kHz
Viewable area W x H	597.8 x 336.3mm, 20.5 x 11.5"
Pixel pitch	0.311mm
Colour	matte, black

02 INTERFACES / CONNECTORS / CONTROLS

Signal input	HDMI x2 (v.2.0) DisplayPort x1 (v.1.4)
USB HUB	x2 (v.2.0 DC5V, 500mA)
HDCP	yes
Headphone connector	yes

03 FEATURES

Blue light reducer	yes
Flicker free	yes
Adaptive Sync support	FreeSync Premium - 1920 x 1080 @48-165Hz
HDR	yes (HDR ready)
OSD languages	EN, DE, FR, ES, IT, RU, JP, CZ, NL, PL
Control buttons	Power, joystick controller: Menu, Up/ i-Style colour, Down/ Input Select, Left/ Eco Mode, Right/ Volume
User controls	picture adjust (contrast, brightness, OD, ACR, ECO, blue light reducer, black tuner, colour saturation, MBR, gamma), input select (auto, manual), audio (volume, mute), store user settings, colour settings (colour temp., 6-Axis, user preset), image adjust (i-Style colour, X-Res Technology, sharp and soft, RGB range, video mode adjust), language, setup menu (OSD H. position, OSD V. position, OSD rotation, OSD time, opening logo, AMD FreeSync Premium, LED), display information, recall
Speakers	2 x 2W
Convenience	Kensington-lock™ prepared, DDC2B, Mac OSX

04 MECHANICAL

Display position adjustments	height, tilt
Height adjustment	130mm
Tilt angle	18° up; 5° down
VESA mounting	100 x 100mm

Cable management system	yes
MTBF	50000 hours

05 ACCESSORIES INCLUDED

Cables	power, USB, HDMI
Other	quick start guide, safety guide

06 POWER MANAGEMENT

Power supply unit	internal
Power supply	AC 100 - 240V, 50/60Hz
Power usage	28W typical, 0.5W stand by, 0.3W off mode

07 SUSTAINABILITY

Regulations	CE, TÜV-Bauart, EAC, RoHS support, ErP, WEEE, REACH, UKCA
Energy efficiency class (Regulation (EU) 2017/1369)	E
REACH SVHC	above 0.1%: Lead

08 DIMENSIONS / WEIGHT

Product dimensions W x H x D	610.5 x 409.5 (539.5) x 256mm
Box dimensions W x H x D	692 x 505 x 228mm
Weight (without box)	5.7kg
Weight (with box)	7.5kg
EAN code	4948570118878

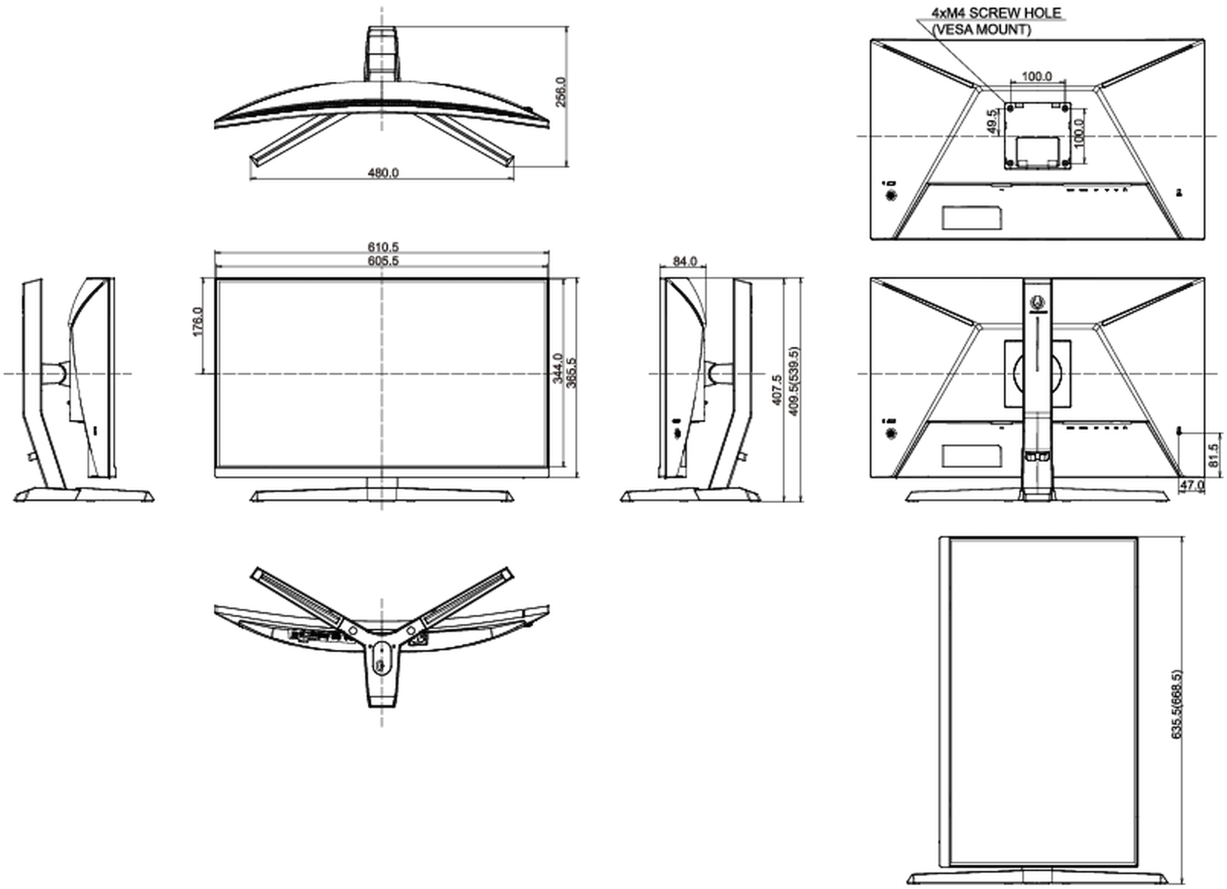

All trademarks and registered trademarks acknowledged. E & O E. Specification subject to change without notice. All LCD's comply with ISO-9241-307:2008 in connection with pixel defects.

© IIYAMA CORPORATION. ALL RIGHTS RESERVED