Get ahead with the G2450HSU with VA Panel and 1ms MPRT

Featuring VA technology with 75Hz refresh rate and 1ms MPRT, the 24'' Full HD G2450HSU guarantees super image quality. The ability to customize the screen settings using the predefined and custom gaming modes along with the Black Tuner function gives you total control over the dark scenes and makes sure details are always clearly visible.

1ms

Fast response time is key to ultra-smooth gaming. It reduces ghosting and blurring providing the user with an improved graphic performance.

VA PANEL TECHNOLOGY

Guaranteeing excellent contrast ratio making all the nuances between the light and dark colours clearly visible.

01 DISPLAY CHARACTERISTICS

Diagonal	23.8", 60cm
Panel	VA LED, matte finish
Native resolution	1920 x 1080 @75Hz (2.1 megapixel Full HD)
Aspect ratio	16:9
Panel brightness	250 cd/m²
Static contrast	3000:1
Advanced contrast	80M:1
Response time (MPRT)	1ms
Viewing zone	horizontal/vertical: 178°/178°, right/left: 89°/89°, up/down: 89°/89°
Colour support	16.7mln
Horizontal Sync	31 - 85kHz
Viewable area W x H	526 x 296mm, 20.7 x 11.6"
Pixel pitch	0.274mm
Colour	matte, black

02 INTERFACES / CONNECTORS / CONTROLS

Signal input	HDMI x1 (v.1.4) DisplayPort x1 (v.1.2)
USB HUB	x2 (v.2.0 DC5V, 500mA)
HDCP	yes
Headphone connector	yes

03 FEATURES

Blue light reducer	yes
Flicker free	yes
Adaptive Sync support	1920 x 1080 @48-75Hz
OSD languages	EN, DE, FR, ES, IT, RU, JP, CZ, NL, PL
Control buttons	Power, joystick controller: Menu, Up/ i-Style colour, Down/ Input Select, Left/ Eco Mode, Right/ Volume
User controls	picture adjust (contrast, brightness, OD, ACR, ECO, blue light reducer, black tuner, colour saturation, gamma), input select (auto, manual), audio (volume, mute), store user settings, colour settings (colour temp., user preset), image adjust (i-Style colour, sharp and soft, HDMI RGB range, video mode adjust), language, setup menu (OSD H. position, OSD V. position, OSD time, opening logo, AMD FreeSync, MBR), display information, recall
Speakers	2 x 2W
Convenience	Kensington-lock™ prepared, DDC2B, Mac OSX

04 MECHANICAL

Display position adjustments	tilt
Tilt angle	22° up; 4° down
VESA mounting	100 x 100mm
Cable management system	yes

05 ACCESSORIES INCLUDED

Cables	power, USB, HDMI

Other	quick start guide, safety guide

06 POWER MANAGEMENT

Power supply unit	internal
Power supply	AC AC - 100V, 240/V, 50Hz
Power usage	18W typical, 0.5W stand by, 0.3W off mode

07 SUSTAINABILITY

Regulations	CE, TÜV-Bauart, EAC, RoHS support, ErP, ENERGY STAR ®, WEEE, REACH
Energy efficiency class (Regulation (EU) 2017/1369)	E
REACH SVHC	above 0.1%: Lead

08 DIMENSIONS / WEIGHT

Product dimensions W x H x D	539 x 393 x 202mm
Box dimensions W x H x D	606 x 400 x 137mm
Weight (without box)	3.7kg
Weight (with box)	5.1kg
EAN code	4948570119202

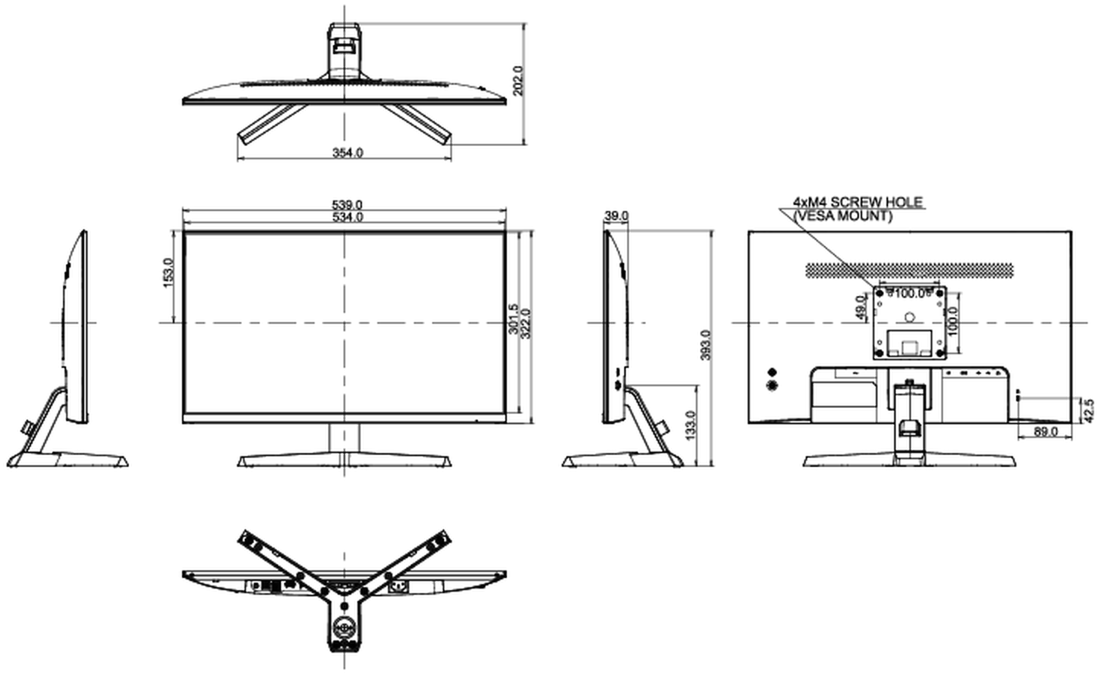

All trademarks and registered trademarks acknowledged. E & O E. Specification subject to change without notice. All LCD's comply with ISO-9241-307:2008 in connection with pixel defects.

© IIYAMA CORPORATION. ALL RIGHTS RESERVED